FRITZ HANSEN

N02™ RECYCLE

Product Fact Sheet

N02™ RECYCLE

N02™ Recycle is crafted with household plastic waste collected, processed and recycled in central Europe. A strong, comfortable and considered chair by Japanese studio nendo, its signature design feature was inspired by a simple crease of paper on the designer's worktable. The chair series is available in upholstered, front upholstered, with upholstered seat, and non-upholstered versions, and comes in a range of bases, from four legs to sledge to bar and counter heights. All non-upholstered models, including bar and counter heights, are stackable thanks to the chair's open base design.

PRODUCT TYPE
Chair / Armchair

ENVIRONMENT
Indoor

DESIGNER / YEAR OF DESIGN
nendo, 2019

ABOUT THE DESIGNER
nendo is a Tokyo-based design studio founded in 2002 by Oki Sato. Working across furniture, product design and architecture, the studio has realised projects for clients worldwide. nendo's work has been recognised with numerous awards, including the Red Dot Design Award and honours from Wallpaper* and Dezeen.

MODELS
N02-10: Chair w. tube legs
N02-11: Armchair w. tube legs
N02-20: Chair w. sledge base
N02-21: Chair w. sledge base
N02-30: Chair w. swivel base and castors
N02-31: Armchair w. swivel base and castors
N02-40: Counter stool w. tube legs
N02-50: Bar stool w. tube legs

MATERIAL

Shell:
The shell and arm pads are made of 100% recycled plastic (PP) and is 100% recyclable.

All models are also available with seat, front or full upholstery in textile or leather. The shell is padded with foam. A water-soluble glue is used for bonding of upholstery to the foam and foam to the shell.

Base:
The tube legs comes in powder coated or chromed steel w. black plastic gliders. The sledge base is available in chromed steel w. black plastic gliders. The swivel base is made in polished aluminium w. black plastic castors. The chair has not been treated with any biocidal products.

MATERIALS IN %:
N02STDFRU: Chair, tube legs, front upholstery
Steel: 43%
PP Moplen: 51%
Foam: 3%
Textile: 3%

N02ARMSFU: Armchair, tube legs, full upholstery
Steel: 43%
PP Moplen: 44%
Foam: 5%
Textile: 8%

N02SWAFRU: Armchair, swivel base, front upholstery
Steel: 40%
PP Moplen: 36%
Aluminium: 14%
PA6: 6%
Foam: 2%
Textile: 2%

N02BARSU: Bar stool, seat upholstery
Steel: 44%
PP Moplen: 53%
Foam: 1%
Textile: 2%

FEATURES
- Stackable: N02-10, N02-11, N02-20, N02-21, N02-40, N02-50 (without upholstery)
- Glides without felt
- Linking device for N02-10, N02-11
- Transport trolley for 10 pcs. for N02-10, N02-11, N02-20, N02-21 (without upholstery)
- Seat cushion (N02-70)

SURFACES

Shell:
The shell is available in 7 colours:

Dark Orange | Dark Red | Dark Blue | Light Blue
Grey | Black | Off White

Base:
The base is available in the following variants:

- Tube legs: Chromed steel or Powder coated steel in colours matching the shell colour
- Sledge base: Chromed steel
- Swivel base: Polished aluminium

UPHOLSTERY
N02™ Recycle is available with upholstery in the following selection of textile and leather types:

- Christianshavn
- Category 1: Canvas, Capture, Fame, Remix, Re-wool, Technicolour, Tonus
- Category 2: Acca, Cifrado, Clay, Fiord, Hallingdal, Karakorum, Moss, Steelcut, Steelcut Trio, Sunniva, Vanir, Vidar
- Category 3: Mammuth, Essential
- Category 4: Haze, Soft
- Category 5: Grace*, Natural*

*Not applicable for front upholstery.

MADE-TO-ORDER (BESPOKE)
Non-standard configurations (special colours, upholstery etc.) are available upon request at a minimum order quantity.

CERTIFICATION
- N02™ Recycle is EU Ecolabel certified*/**:
  All the N02™ Recycle chair models can be obtained with the EU Ecolabel certification (The Flower). The EU Ecolabel has strict requirements for the environmental impact from raw materials to production of the chair to disposal and recycling.

  *Applies to chairs with powder coated steel parts. No chrome is present at any certified chairs.

  **Does not apply to chairs with upholstery.

- N02™ Recycle is GreenGuard Gold certified

For more information about environment and manufacturing processes, please download our environmental information sheet at: fritzhansen.com

TEST
- EN 16139 L1 General Contract Use for strength, durability, stability and safety
- EN 1022 for stability

The N02™ Recycle chair is intended for daily use by persons up to 110 kg and occasional use by heavier persons.

WEIGHT
Below are examples based on model N02-10:

- Un-upholstered: 5,8 kg / 12.9 lb
- Seat-upholstered: 6,0 kg / 13.2 lb
- Front-upholstered: 6,1 kg / 13.4 lb
- Fully-upholstered: 6,5 kg / 14.3 lb

Additional models are available upon request.

COUNTRY OF ORIGIN
Poland

PRE-ASSEMBLED
Yes

PACKAGING
The chair is shipped in cardboard box. Inside the box, the item is wrapped in a PE bag to protect from dust, as well as vulnerable corners are protected with PE foam.

All packaging material can be recycled depending on local capability.

CLEANING AND CARE
Find recommendations for cleaning and care at:
fritzhansen.com/maintenance

REPAIR, DISPOSAL AND REUSE
In case of repair and disposal, the chair can be disassembled and replaced/disposed accordingly. Check local regulations for recycling options and whether there is potential for reuse.

WARRANTY
Fritz Hansen provides warranty on standard products against defects in materials and workmanship.

The standard warranty for Furniture is 5 years. Within the Furniture collection, an extended warranty of up to 10 years is provided on selected products/parts.

- Standard: 5 years (Lacquer on base, Height-adjustable, Swivel, Castors, Textile, Leather: Essential, Soft)
- Extended: 10 years (Base, Shell, Armrests, Leather: Grace, Haze, Natural)

On any material, textile or leather, which is not listed in the price list on a specific product, the warranty is 2 years.

Additional warranty conditions can be found at:
fritzhansen.com/warranty

Dimensions

N02-10

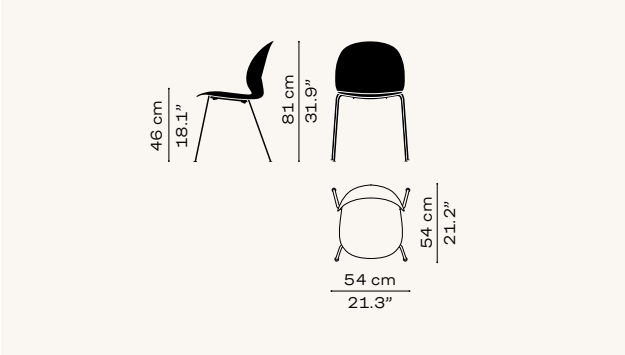

Features: Stackable (10 pcs.)*

N02-11

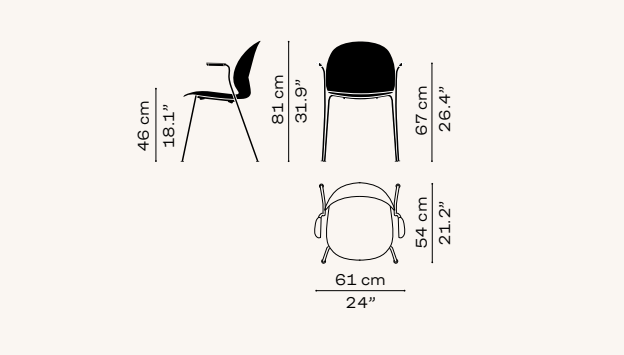

Features: Stackable (10 pcs.)*

N02-20

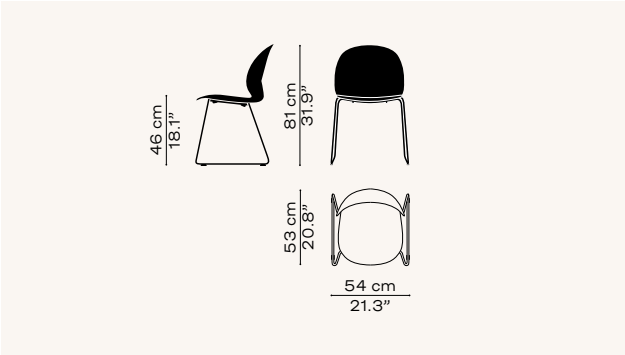

Features: stackable (10 pcs.)*, Add linking device

N02-21

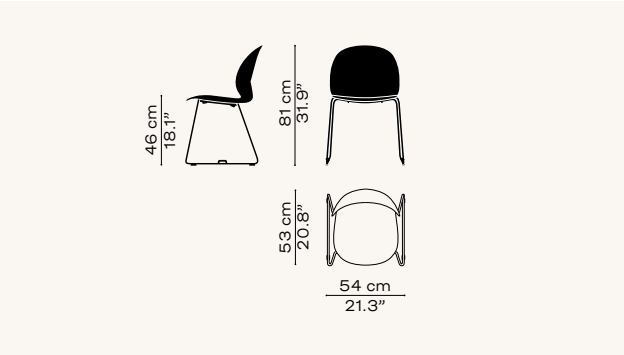

Features: Stackable (10 pcs.)*, Build-in linking device

N02-30

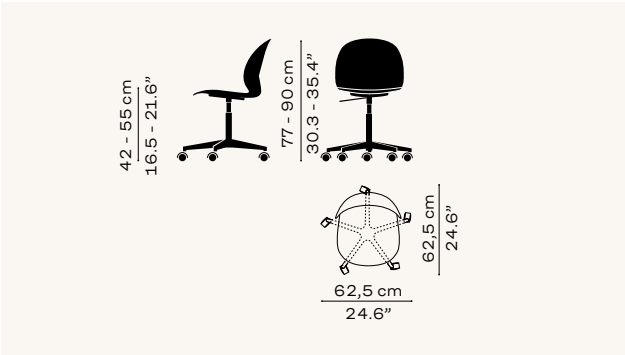

Features: Swivel, Hight-adjustable

N02-31

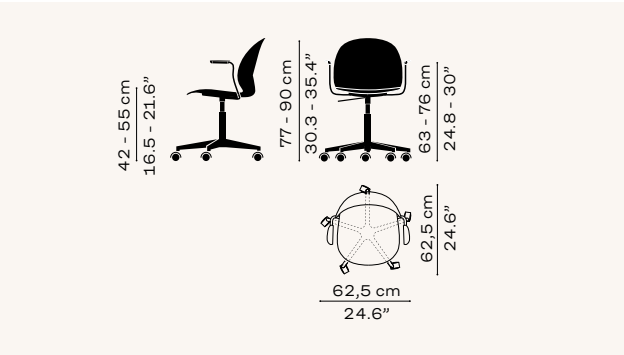

Features: Swivel, Hight-adjustable

N02-40

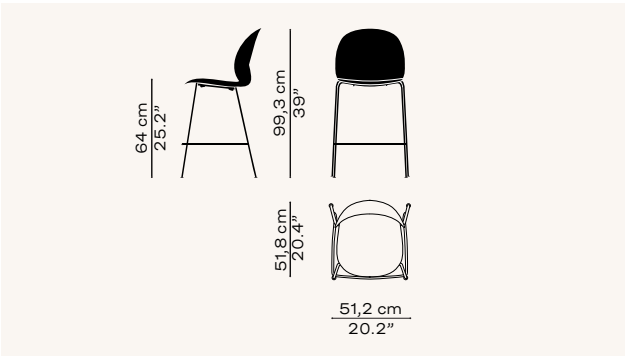

Features: Stackable (4 pcs.)*

N02-50

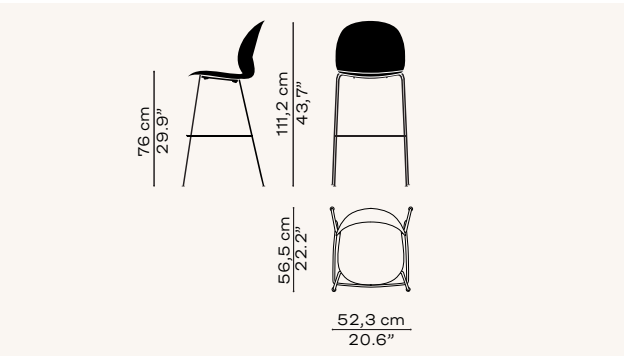

Features: Stackable (4 pcs.)*

*Without upholstery